# Effect of microwave drying and blast drying on rice quality

The experiment was conducted to study the changes of bursting waist rate, germination rate, moisture content and RVA linguistic characteristics of different varieties of rice under the conditions of hot air and microwave drying equipment. The results show that microwave drying is more likely to cause Valley, especially indica rice burst and reduce germination rate.

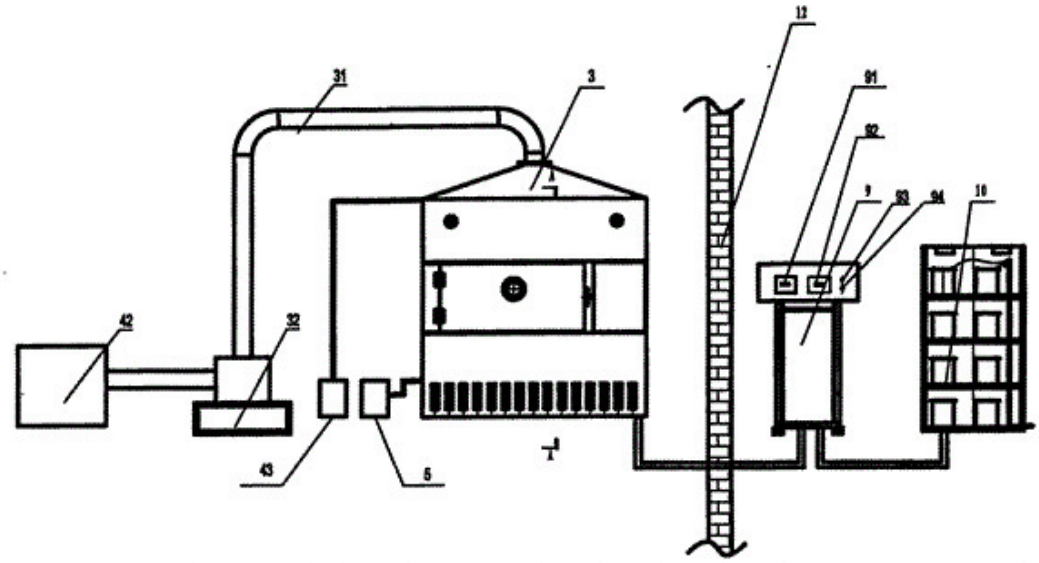

The RVA spectrum characteristic value was closely related to the apparent amylose and popping waist rate, and the decrease value of hot air and microwave drying was positively correlated with the apparent amylose and popping waist rate, and the correlation coefficients were 0.889","0.906"and 0.789", "and 0.846" respectively. There was also a significant positive correlation between the apparent straight chain detergent and the increase of bursting waist rate during hot air drying and microwave drying, and the correlation coefficient was 0.848 "" and 0.971 ". Drying affected the taste of Japonica Rice and glutinous rice, and the hardness of rice increased slightly. Rice has high amylose content, and microwave drying has great influence on its quality, which is not conducive to later storage and consumption.

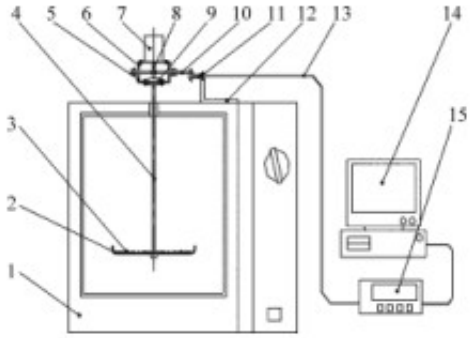


Key words: rice microwave drying, hot air drying, burst waist, RVA characteristics

The moisture content of newly harvested rice is very high. If not treated in time, the materials and methods will change every time, which will affect the processing quality and edible quality of rice. On the other hand, the bursting waist rate was related to the basic index of rice. Some studies showed that the basal tamping index of different rice varieties was related to their appearance, and the cracking was most serious in the varieties with wide shape. It has been found that rice varieties with more amylose are more susceptible to cracking than rice varieties with more amylose when they are heated and dried.

Hot air drying is a traditional method commonly used in grain drying. However, the high drying temperature will cause the food quality of Xinfeng to be destroyed, and the low drying temperature will take a long time. Microwave drying uses high-frequency electromagnetic wave to drive the polar molecule in the drying material to rotate at high speed, so that the internal friction of the material produces heat, and promotes the evaporation of moisture, so as to achieve the purpose of drying. Microwave has the advantages of high heating speed, fast drying rate, high energy utilization rate, safety and pollution-free, but its continuous and large-scale drying is limited because of its thin thickness and viscosity through the grain layer.

In this experiment, microwave drying and hot air drying technology were selected to treat rice on the basis of allowable heating temperature of 40 C, and 13.5% moisture was taken as the drying end point. The quality changes of different varieties of rice after drying were compared in order to explore the relationship between the internal components of different varieties of rice and the quality changes of rice before and after drying. Art provides reliable basis.

1.1 The tested materials are quick-drying, energy-saving and efficient, but most of the dried rice varieties have a high waist burst rate. All the tested rice harvested from October to November 2012, respectively, increased the harvesting range. The whole milled rice rate and the edible quality of rice were reduced to varying degrees in Henan Xinxiang, Jiangsu Suqian, Heilongjiang farmland, after impurity removal and packaging. On the one hand, the bursting waist rate of rice is related to drying conditions, drying temperature, labeling, stored in a 4 C refrigerator for use.

1.2 test equipment

Fw100 High Speed Universal Crusher: Tianjin Tester Instruments Co., Ltd; Electronic Analysis Balance: Denver Instruments Co., Ltd; MCR-3 Microwave Chemical Reactor: Xi'an Yuhui Instruments Co., Ltd; Electronic Vernier Caliper: Nanjing Sanfeng Instruments Co., Ltd: 101-3AS Electric Heating Blast Drying Box: Shanghai Yarong Biochemical Instruments Factory; PQX Sectional Programmable Man Industrial climate chamber: Ningbo Southeast Instrument Co., Ltd; Rapid Viscosity Analyzer RVA: Newport Scientific Instrument Company, Australia