Study on Dielectric Properties of Jiangnan New Year Cake Based on Microwave Drying

Absrtact: The effects of frequency (915-2450 MHz), moisture content (16-48%) and temperature (25-60 C) on dielectric constant and dielectric loss factor (E) of Jiangnan rice cake were measured and studied by network analyzer.

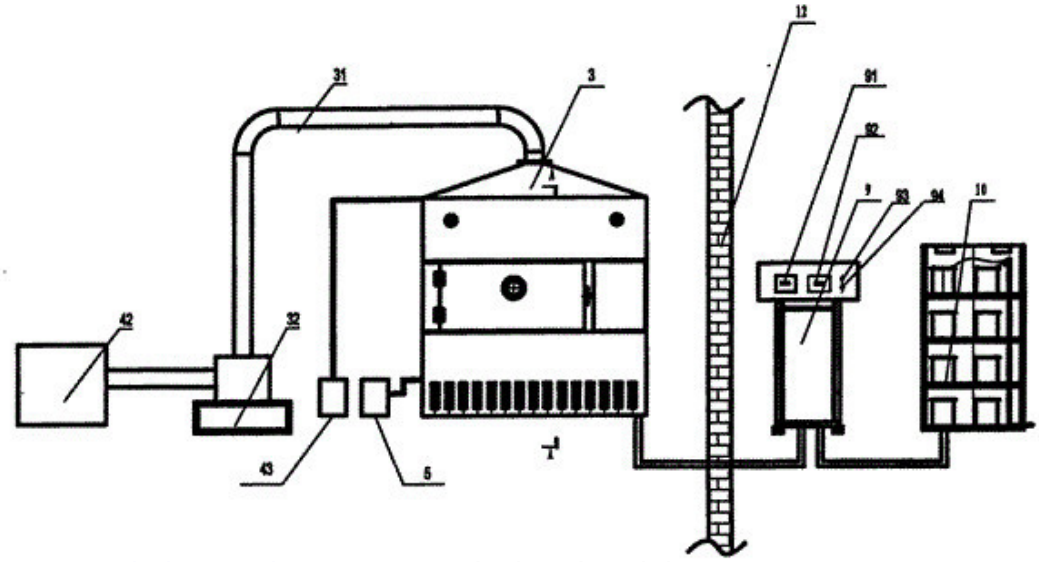

The microwave drying equipment was calculated and the effects of frequency, moisture content and temperature on it were analyzed. The relationship model between dielectric parameters of rice cake and main influencing factors was established under partial frequencies, and the accuracy and feasibility of predicting moisture content based on dielectric parameters were

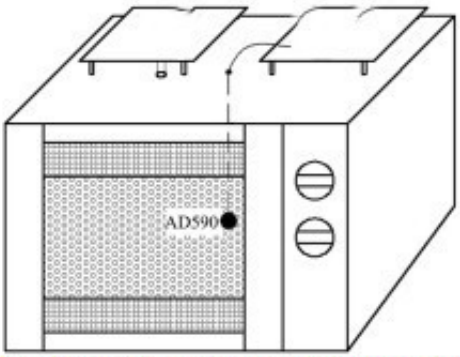

Schematic diagram of microwave drying temperature control system

tested.

The results show that in the frequency range of 915-2450 MHz, the e''of rice cake decreases with the increase of frequency, the e'' increases with the increase of frequency, the e''and e''

both increase with the increase of water content, but decrease with the increase of temperature, and the energy penetration depth decreases with the increase of water content and frequency, and increases with the increase of temperature.

The relationship between dielectric parameters and main influencing factors can be described by binary cubic equation, and the determinant coefficients of each model are greater than 0.99. This study has important guiding significance for understanding the dielectric properties of rice cake and the development of moisture content detector.

Key words: rice cake microwave drying; dielectric properties; moisture content; temperature; frequency; penetration depth

Jiangnan New Year Cake is a kind of traditional food, which is white and tasteless. It is made of Japonica Rice and glutinous rice in a certain proportion. It is processed by soaking, water milling, pressing, cooking, extrusion and other processes. It has excellent quality of smoothness and glutinous, and is welcomed by consumers.

New Year Cake contains protein, fat, carbohydrate, nicotinic acid, calcium, phosphorus, potassium, magnesium and other nutrients, and it is the most famous in Jiangnan Watery Township. In the storage process, especially in summer, rice cake products are prone to mildew, resulting in a short shelf life. Generally, the shelf life is less than one week, which affects its sales and sales scope. Therefore, extending the shelf life of rice cake is an urgent problem to be solved in the current market.

The traditional drying method is mainly hot air drying. The temperature gradient is opposite to the moisture gradient in the drying process. The more difficult the material moisture evaporates, the longer the drying time is, the greater the energy consumption. Microwave drying is related to more and more food enterprises because of its short drying time, high efficiency and relatively low energy consumption. Note. In dielectric heating treatment and cooking, dielectric properties largely determine the behavior of materials in high frequency or microwave electric field. In addition, dielectric properties of materials depend on their composition, etc.

At present, the research on dielectric properties of food is mainly applied to rapid detection, sterilization and insecticide, while the research on dielectric properties of materials related to dielectric drying is rarely reported.

??